Realistic View

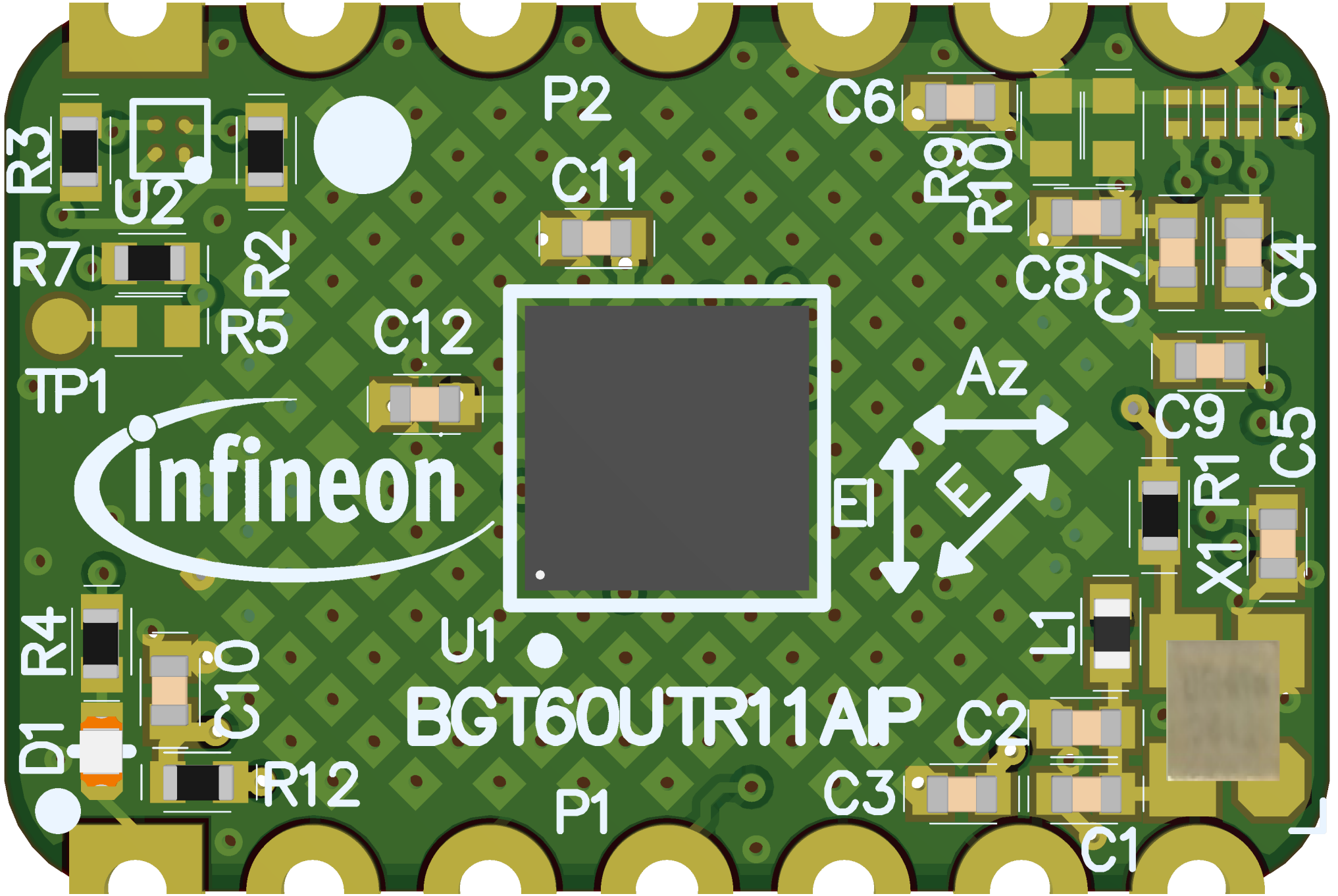

Realistic View

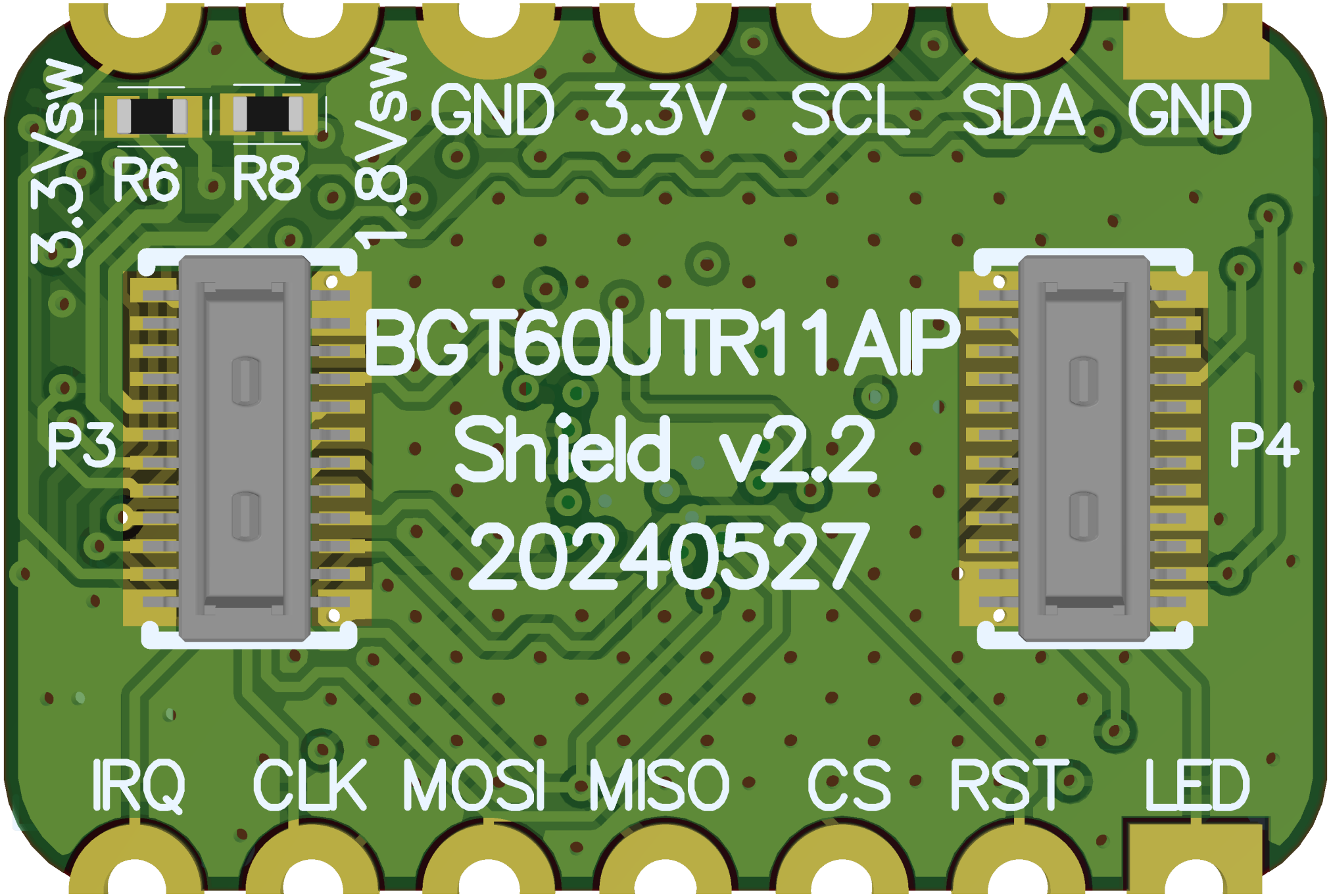

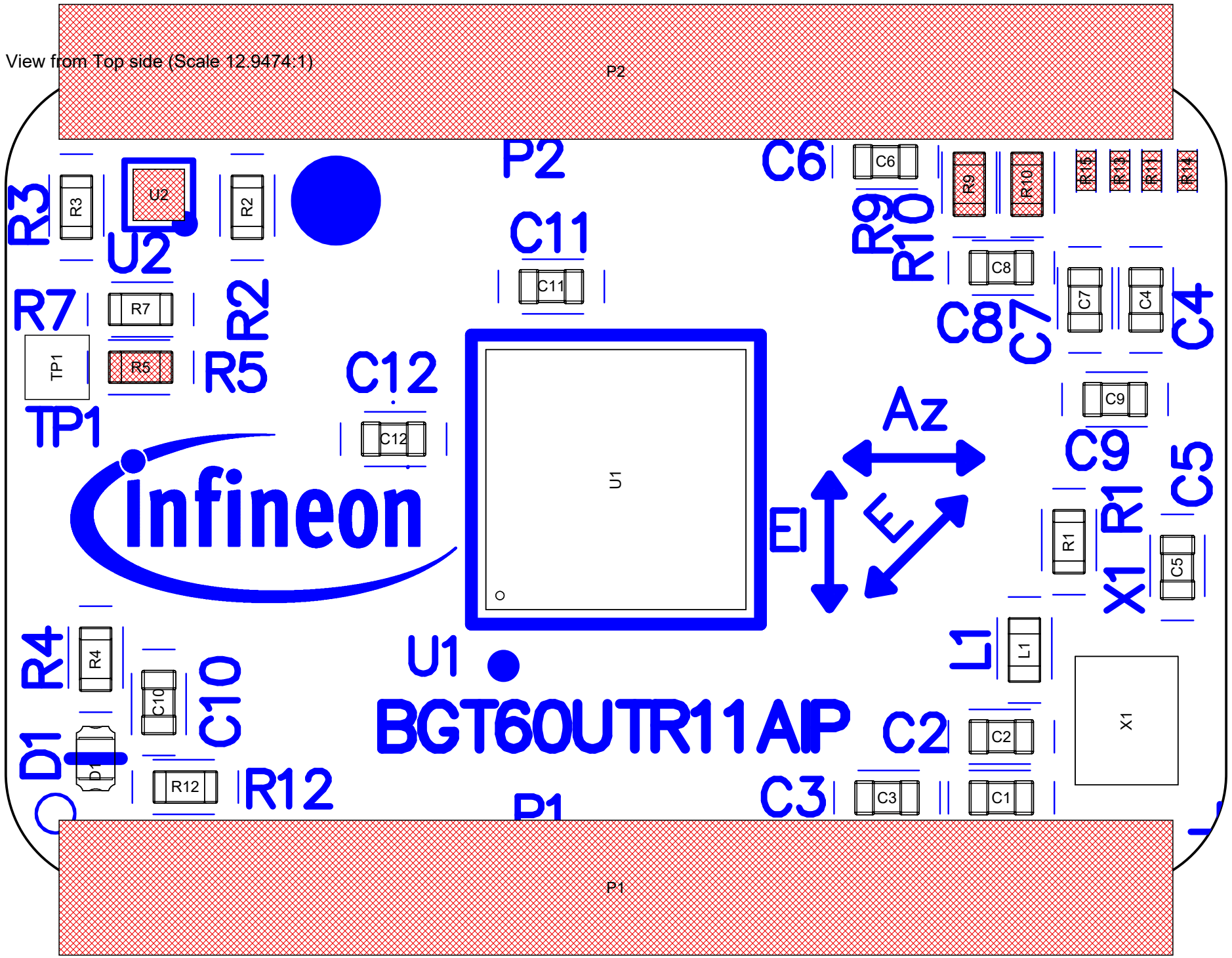
View from Top side (Scale 12.9474:1)
P2
P1
U1
U2
TP1
R1
R2
R3
R4
R5
R7
R9
R10
R11
R12
R13
R14
R15
C1
C2
C3
C4
C5
C6
C7
C8
C9
C10
C11
C12
D1
L1
X1
Infineon
BGT60UTR11AIP
Az
E
E

View from Bottom side (Scale 12.9474:1)

